N-bit Adder Design in Verilog

The next Verilog/ VHDL project is a complete co-processor specially designed for cryptographic applications. The co-processor has standard instructions and dedicated function units specific for security. The co-processor is implemented mainly in VHDL, but the N-bit Adder is designed in Verilog. The Verilog code for the N-bit Adder will be instantiated later in a VHDL design. In next posts, implementations of major modules in the co-processor will be presented. The complete co-processor design and implementation will be presented after every part of the co-processor is posted.

This post presents Verilog code for N-bit Adder designed for the co-processor. The Verilog code for N-bit Adder is done by using Structural Modeling.

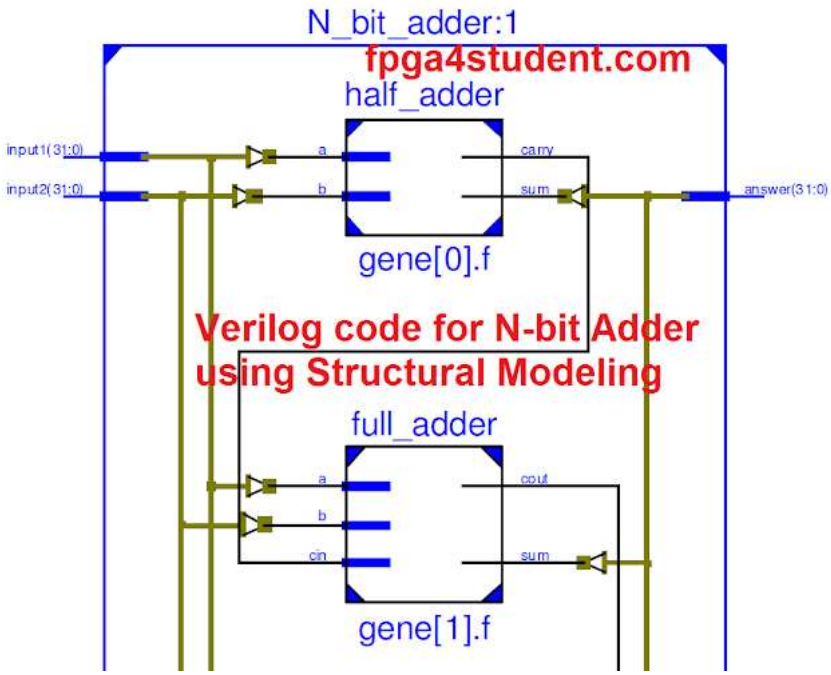

As shown in the above picture, the N-bit Adder is simply implemented by connecting 1 Half Adder and N-1 Full Adder in series. The Verilog code for N-bit Adder is designed so that the N value can be initialized independently for each instantiation. To do it, the Verilog code for N-bit Adder uses Generate Statement in Verilog to create a chain of full adders for implementing the N-bit Adder.

Verilog code for N-bit Adder using Structural Modeling:

```
// fpga4student.com: FPGA projects, Verilog projects, VHDL projects
// Verilog project: Verilog code for N-bit Adder
// Top Level Verilog code for N-bit Adder using Structural Modeling
module N_bit_adder(input1,input2,answer);
parameter N=32;
input [N-1:0] input1,input2;
   output [N-1:0] answer;
   wire  carry_out;
  wire [N-1:0] carry;
   genvar i;
   generate
   for(i=0;i<N;i=i+1)
     begin: generate_N_bit_Adder
   if(i==0)
  half_adder f(input1[0],input2[0],answer[0],carry[0]);
```

```
   else
  full_adder f(input1[i],input2[i],carry[i-1],answer[i],carry[i]);
     end
  assign carry_out = carry[N-1];
   endgenerate
endmodule

// fpga4student.com: FPGA projects, Verilog projects, VHDL projects
// Verilog project: Verilog code for N-bit Adder
// Verilog code for half adder
module half_adder(x,y,s,c);
   input x,y;
   output s,c;
   assign s=x^y;
   assign c=x&y;
endmodule // half adder

// fpga4student.com: FPGA projects, Verilog projects, VHDL projects
// Verilog project: Verilog code for N-bit Adder
// Verilog code for full adder
module full_adder(x,y,c_in,s,c_out);
   input x,y,c_in;
   output s,c_out;
 assign s = (x^y) ^ c_in;
 assign c_out = (y&c_in)| (x&y) | (x&c_in);
endmodule // full_adder
```

Testbench Verilog code for N-bit Adder:

```
// fpga4student.com: FPGA projects, Verilog projects, VHDL projects
// Verilog project: Verilog code for N-bit Adder
// Testbench Verilog code for N-bit Adder
module tb_N_bit_adder;
 // Inputs
 reg [31:0] input1;
 reg [31:0] input2;
 // Outputs
 wire [31:0] answer;

 // Instantiate the Unit Under Test (UUT)
 N_bit_adder uut (
  .input1(input1),
  .input2(input2),
  .answer(answer)
 );

 initial begin
  // Initialize Inputs
  input1 = 1209;
  input2 = 4565;
  #100;
  // Add stimulus here
 end

endmodule
```

Simulation Waveform for the N-bit Adder:

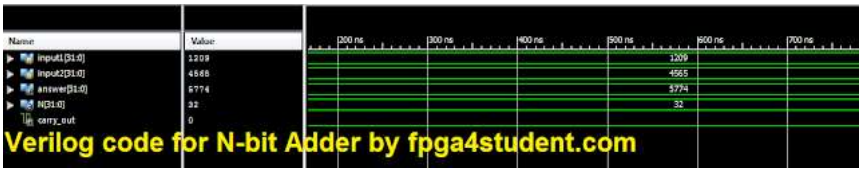

By running the Testbench Verilog code for the N-bit Adder, we can verify the correctness of the N-bit Adder. The simulation waveform shows that the N-bit Adder accurately operates.

Recommended Verilog projects:

1. **What is an FPGA? How Verilog works on FPGA**
2. Verilog code for FIFO memory
3. Verilog code for 16-bit single-cycle MIPS processor
4. Programmable Digital Delay Timer in Verilog HDL
5. Verilog code for basic logic components in digital circuits
6. Verilog code for 32-bit Unsigned Divider
7. Verilog code for Fixed-Point Matrix Multiplication
8. Plate License Recognition in Verilog HDL
9. Verilog code for Carry-Look-Ahead Multiplier
10. Verilog code for a Microcontroller
11. Verilog code for 4x4 Multiplier
12. Verilog code for Car Parking System
13. Image processing on FPGA using Verilog HDL
14. How to load a text file into FPGA using Verilog HDL
15. Verilog code for Traffic Light Controller
16. Verilog code for Alarm Clock on FPGA
17. Verilog code for comparator design
18. Verilog code for D Flip Flop
19. Verilog code for Full Adder
20. Verilog code for counter with testbench
21. Verilog code for 16-bit RISC Processor
22. Verilog code for button debouncing on FPGA
23. How to write Verilog Testbench for bidirectional/ inout ports
24. Tic Tac Toe Game in Verilog and LogiSim
25. 32-bit 5-stage Pipelined MIPS Processor in Verilog (Part-1)
26. 32-bit 5-stage Pipelined MIPS Processor in Verilog (Part-2)
27. 32-bit 5-stage Pipelined MIPS Processor in Verilog (Part-3)
28. Verilog code for Decoder
29. Verilog code for Multiplexers
30. N-bit Adder Design in Verilog
31. Verilog vs VHDL: Explain by Examples
32. Verilog code for Clock divider on FPGA
33. **How to generate a clock enable signal in Verilog**
34. **Verilog code for PWM Generator**
35. **Verilog coding vs Software Programming**

DMCA PROTECTED

Privacy Policy | Disclaimer | Sitemap | Contact | Advertise Here

Copyright © 2016-2020 FPGA4student.com All Rights Reserved.